TESLA 100 A CURRENT TRANSFORMER SPECIFICATION

Electrical Specifications

Max Primary Current	120 A
Operating Frequency	50 Hz – 60 Hz
Operating Temperature Range	-20°C to 50°C (-4°F to 122°F)
Max Operating Humidity (with condensation)	RH 95%
Lead Length	800 mm
Wire Type	Twisted leads
Wire Ratings	600 V, 125°C
Wire Gauge	22 AWG

Mechanical Specifications

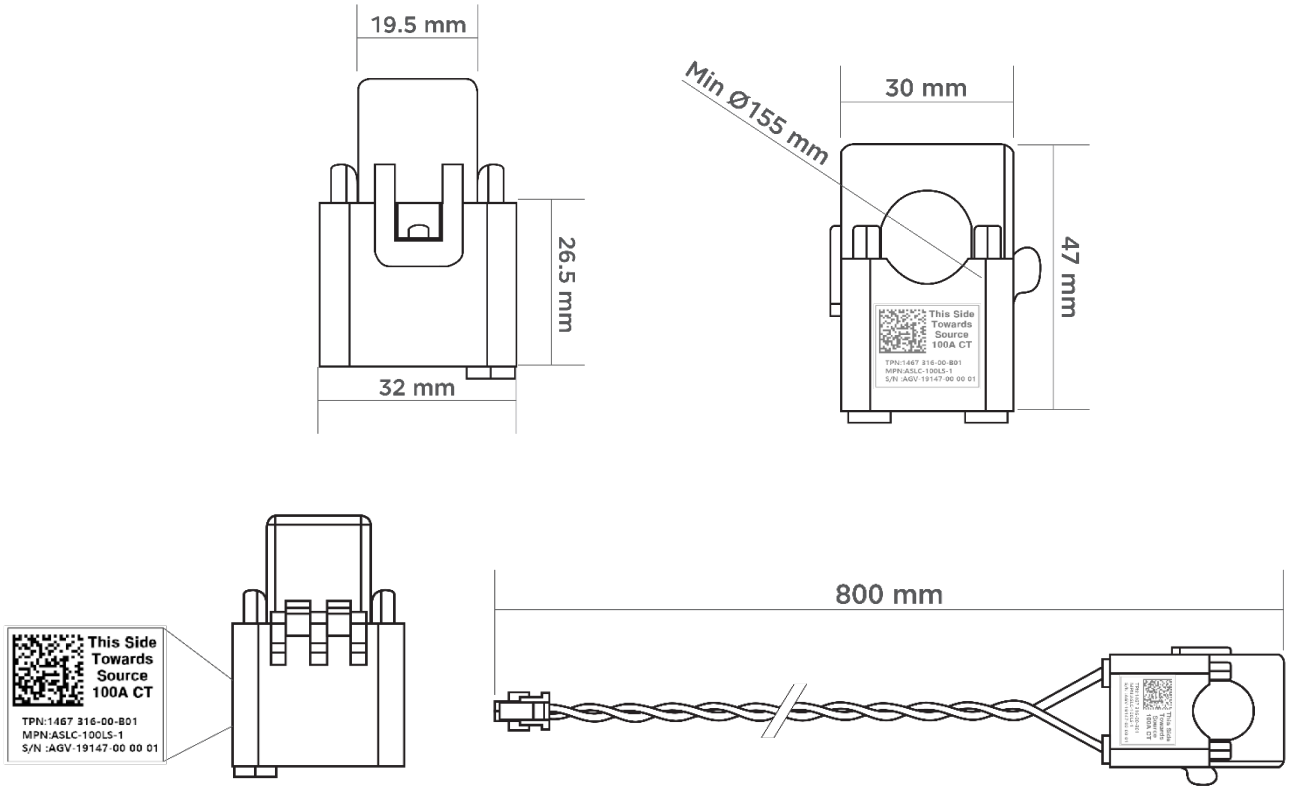

WARNING: Before installing, disconnecting, and/or adjusting CTs, ensure the circuits being measured are not energized and the system is completely powered down. Failure to de-energize the system may compromise operator and equipment safety. Additionally, plug the CT into the terminal BEFORE clamping it around the conductor to be measured.