Customer's Name：

Spec.No. ： LNT051280A-B-GBP2
Item Coding：LNT-14.34K-16S
Ver： A1
Date：2022-5-11

LINIOTECH ENERGY CO LTD

Specification For Approval

Specifications： 51.2V 280Ah-16S1P（UL）



Approval	Checked	Draft
David. Guo	JOEY ZENG	Mark Mei
Customer Approval		

History of specification

Date	Contents	Remarks
2022-5-11	First issue	

1. Scope

The specification shall be applied to LiFePO4 rechargeable battery pack of 51.2V 280AH 16S1P which is manufactured by LINIOTECH ENERGY CO LTD.

2. Main specifications



	No.	Item	General Parameter	Remark
Package	1	Combination method	16S1P	
	2	Rated Capacity	280Ah	Standard discharge after Standard charge（package)
	3	Factory Voltage	51.2V	Mean Operation Voltage
	4	Voltage at end of Discharge	46V	Discharge Cut-off Voltage
	5	Charging Voltage	56V	Charge Cut-off Voltage
	6	Internal Impedance	≤60mΩ	Internal resistance measured at AC 1KHz after 50% chargeThe measure must uses the new batteries that within one week after

				shipment and cycles less than 5 times
	7	Standard charge	Constant Current 50A Constant Voltage see No.5 0.02CA cut-off	Charge time : Approx 2.5 h
	8	**Maximum Continuous Charge Current**	**150A**	
	9	Standard discharge	Constant current：50A end voltage see NO.4	
	11	**Maximum Continuous Discharge Current**	**150A**	100A when T≥10ºC 50A when 0ºC＞T≥-20ºC
	12	Operation Temperature Range	Charge: 0~45℃	60±25%R.H. Bare Cell
			Discharge: -20~55℃	
	13	Storage Temperature Range	Less than 12 months : -10~35℃	60±25%R.H. at the shipment state
			less than 3 months: -10~45℃	
			Less than 7 day : -20~65℃	
	14	Dimensions	900*675*200mm	Include Bracket
	15	Weight	**Approx ： 128.5 kg（N.W）**	
	16	BMS Port	CANBUS/RS485	
	17	BMS Support	16PCS Parallel	224KWH at max

3. Battery Management System Specification

3.1 BMS function introduction

1）：The BMS is designed for 16 series lithium battery.
2）：The BMS have all functions which are:
Overcharge detection function;
Over discharge detection function
Over current detection function;
Short detection function
Temperature detection function;
Balance function
Communicate function;
Alarm function
Total capacity function;
Storage history function

3.2 BMS Protect parameter

Items	Details	Standard
Cell overcharge protection	Overcharge detection voltage	3.65±0.025V
	Overcharge detection delay time	Typical:1.0s
	Overcharge release voltage	3.38±0.02V
Cell over-discharge protection	Over-discharge detection voltage	2.5±0.02V
	Over-discharge detection delay time	Typical:1.0s
	Over-discharge release voltage	2.9±0.02V or charge
Over-current protection	discharge Over-current protection current1	230±10A
	discharge Over-current detection delay	1S
	discharge Over-current protection current	250±10A
	discharge Over-current detection delay	≤100m±50ms
	Charge OC protection current	230±10A
Short protection	Short protection current	450±10A
	Protection condition	Load short
	Detection delay time	≤300us
	Protection release condition	Charging release
Temperature(T) protection	Charge high T protection	55±3℃
	Charge high T recover	50±5℃
	Discharge high T protection	65±5℃
	Discharge high T recover	60±5℃
	Charge low T protection	-5±5℃
	Charge low T recover	0±5℃
	Discharge low T protection	-20±5℃
	Discharge low T recover	-15±5℃
	Balance threshold voltage	3.45V
Communication	It has canbus/RS485 standard communication interface, it can real-time monitoring the capacity of battery bank, the voltage, current, environment temperature, and charging/discharging	
Alarm	It has over-temperature, over charge, under-voltage, over-current, short circuit alarm	

4. Appearance and structural dimensions

There shall be no such defect as scratch, bur and other mechanical scratch, and the connector should be no rust dirt. The structure and dimensions see attached drawing of the battery.


LINIOTECH

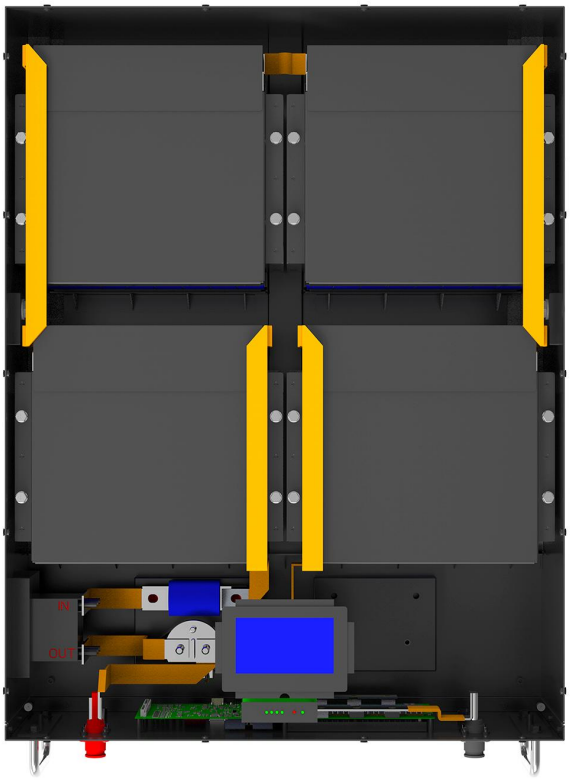



Unit （mm）					
L (Length)	900mm	W(Width)	675mm	H（Height）	200mm
Weight	128.5kgs	Max charge	100A	Max discharge	150A
Cable set	2meter of 35mm2*2 Red & Black				

5. Battery cycle life

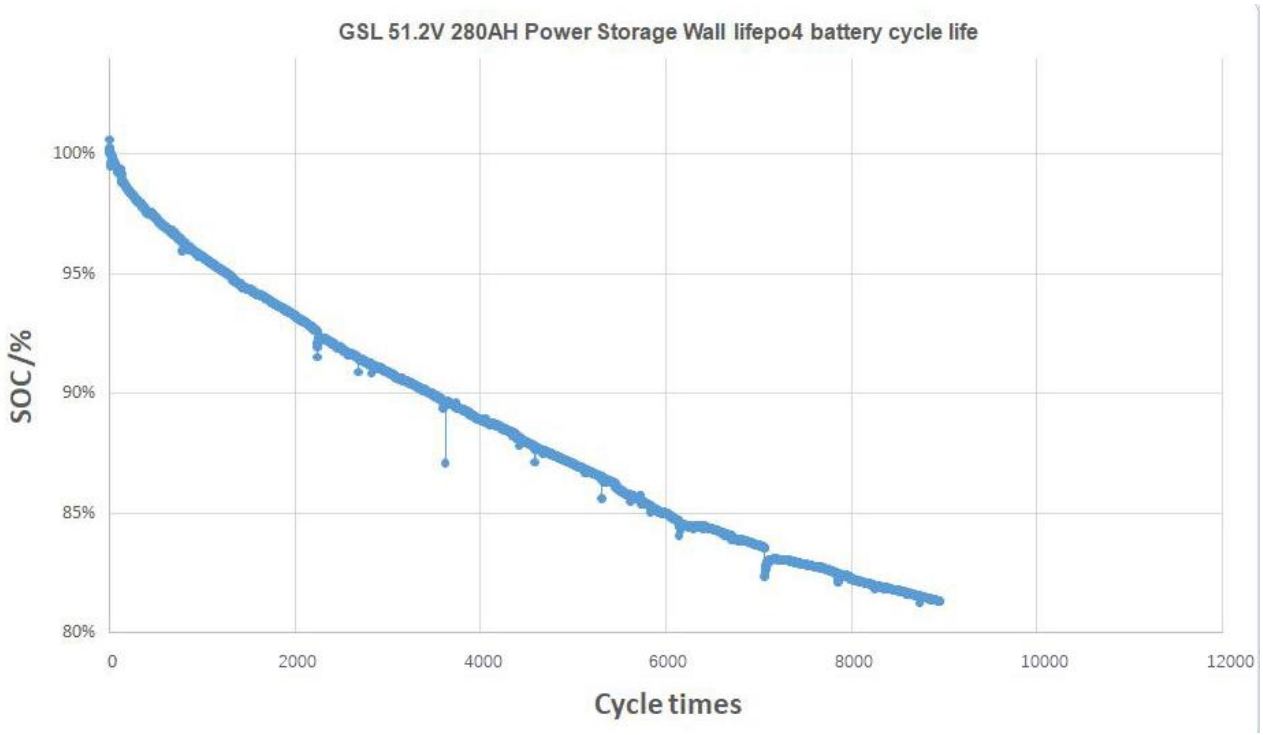

6. Battery test equipment

7.1 Dimension Measuring Instrument

The dimension measurement shall be implemented by instruments with equal or more precision scale of 0.1mm.

7.2 Voltmeter

Standard class specified in the national standard or more sensitive class having inner impedance not less than 10 KΩ/V.

7.3 Ammeter

Standard class specified in the national standard or more sensitive class. Total external resistance including ammeter and wire is less than 0.01Ω.

7.4 Impedance Meter

Impedance shall be measured by a sinusoidal alternating current method (AC 1kHz LCR meter).

7. Standard Test Condition

Test should be conducted with new batteries within one month after shipment from our factory and the cells shall not be cycled more than five times before the test. Unless otherwise defined, test and measurement shall be done under temperature of 23±2℃ and relative humidity of less 75%.,air 86Kpa~106Kpa.

Unless otherwise defined, 30min,rest period after charge,30min,rest period after discharge.

8. Storage and Others

9.1 Long Time Storage

If the battery is stored for a long time (don't used, exceed three months), the cell should be stored in drying and cooling place. The cell's storage voltage should be 51V-53V and the cell is to be stored in a condition that the temperature of 23±2℃ and the humidity 0f 45%- 75%. Long-term use of unused batteries to recharge every 3 months。 Ensure that the battery voltage is within the above range.

9.2 Others

Any matters that this specification does not cover should be conferred between the customer and LINIOTECH ENERGY.

9. Amendment of this Specification

This specification is subject to change with prior notice by LINIOTECH ENERGY.

10. Heating Function (Optional)

Heating Pad model - GE369

Heating control function - 3041600018 (7.3 V / 69.35W)

Each 10kwh battery will contain 8 heating pads.

10. Export Package

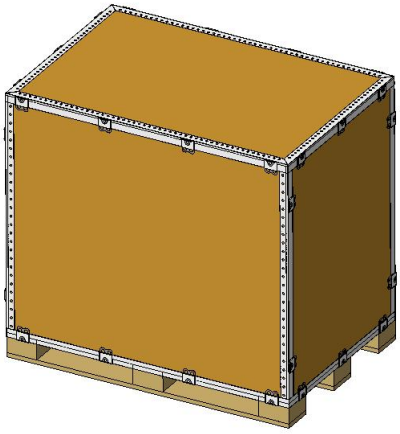

3PCS/PALLET

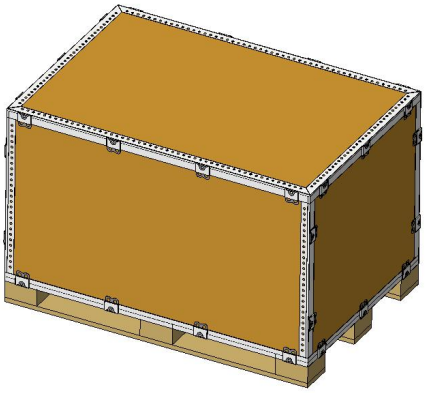

2PCS/PALLET

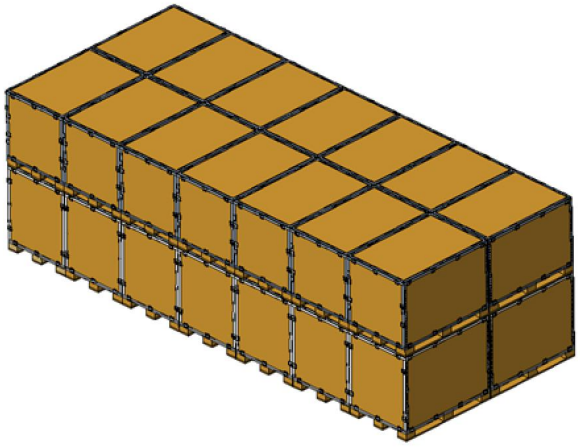

70**PCS/20FT CONTAINER**

11. Appendix

Handling Precautions and Guideline
For Li-ion Rechargeable Batteries

Preface

This document of 'Handling Precautions and Guideline Li-ion Rechargeable Batteries' shall be applied to the battery cells manufactured by LINIOTECH ENERGY.

Note (1) :

The customer is requested to contact LINIOTECH in advance, if and when the customer needs other applications or operating conditions than those described in this document. Additional experimentation may be required to verify performance and safety under such conditions.

Note (2) :

LINIOTECH ENERGY will take no responsibility for any accident when the cell is used under other conditions than those described in this Document.

Note (3):

LINIOTECH ENERGY will inform, in a written form, the customer of improvement(s) regarding

proper use and handling of the cell, if it is deemed necessary.

Danger!

— Do not immerse the battery in water or allow it to get wet.
— Do not use or store the battery near sources of heat such as a fire or heater.
— Do not use any chargers other than those recommended by LINIOTECH ENERGY.
— **Do not reverse the positive(+) and negative(-) terminals.**
— Do not connect the battery directly to wall outlets or car cigarette-lighter sockets.
— Do not put the battery into a fire or apply direct heat to it.
— Do not short-circuit the battery by connecting wires or other metal objects to the positive(+) and negative(-) terminals.
— Do not pierce the battery casing with a nail or other sharp object, break it open with a hammer, or step on it.
— Do not strike, throw or subject the battery to sever physical shock.
— Do not directly solder the battery terminals.
— Do not attempt to disassemble or modify the battery in any way.
— Do not place the battery in a microwave oven or pressurized container.
— **Do not use the battery in combination with primary batteries (such as dry-cell batteries) or batteries of different capacity, type or brand.**
—Do not use the battery if it gives off an odor, generates heat, becomes discolored or deformed, or appears abnormal in any way. If the battery is in use or being recharged, remove it from the device or charger immediately and discontinue use.

Caution!

Do not use or store the battery where is exposed to extremely hot, such as under window of a car in direct sunlight in a hot day. Otherwise, the battery may be overheated. This can also reduce battery performance and/or shorten service life.

If the battery leaks and electrolyte gets in your eyes, do not rub them. Instead, rinse them with clean running water and immediately seek medical attention. If left as is, electrolyte can cause eye injury.