TN259001A

Electric drill cargo lift

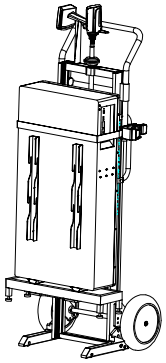

Operation Manual

Dear Customer,

Welcome to using the TN259001A Electric Drill Cargo Lift. Please read this manual carefully before use, assemble the equipment in strict accordance with the assembly steps specified herein, and operate it following the procedures outlined in this manual.Important Note: Please strictly comply with all safety precautions. Any safety accidents involving equipment damage, property loss or personal injury caused by improper use in violation of the operating specifications in this manual shall be borne entirely by the user, including all corresponding liabilities and consequential damages.

Complete Machine Introduction::

Please refer to the respective labels and instructions as shown in the figure below.

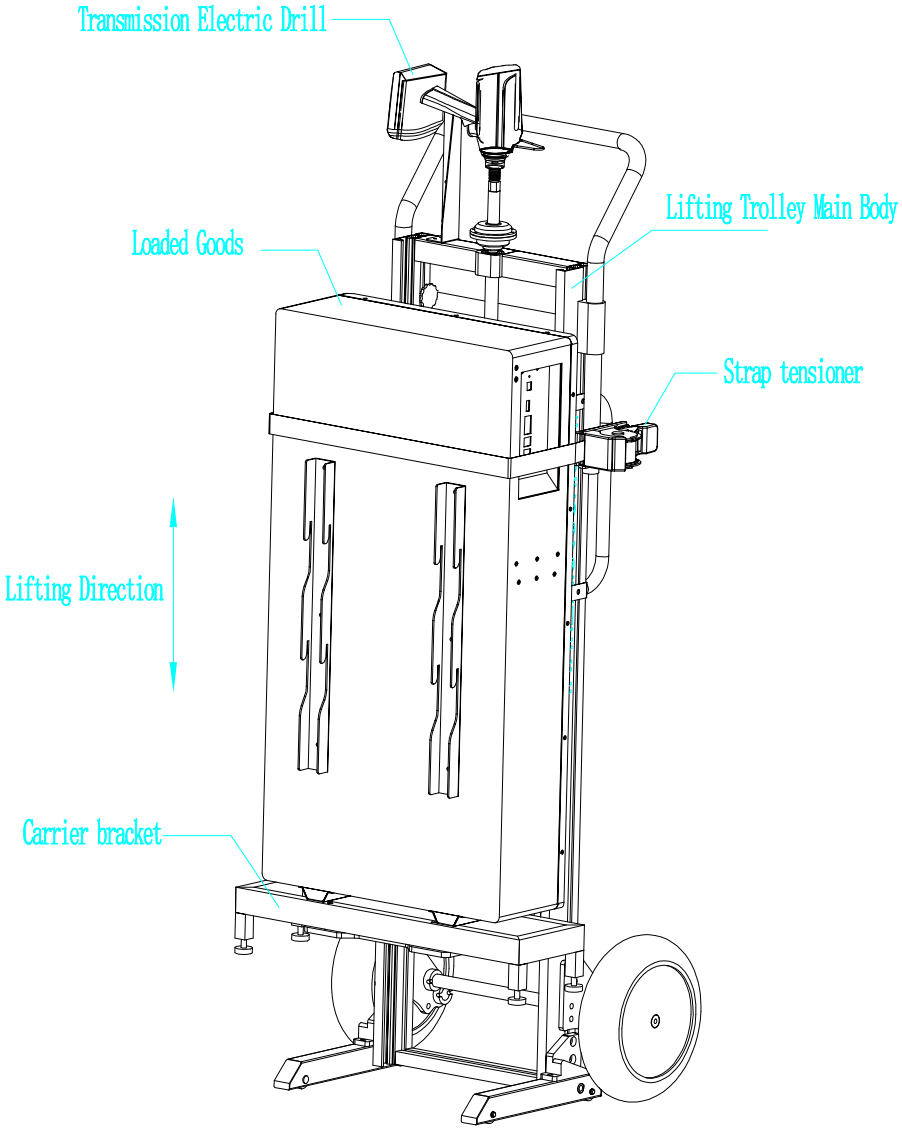

Note: The loaded goods and transmission electric drill shown in the figure are for scene illustration purposes only and are not included in your delivered goods.

Specifications and Dimensions of the Load-carrying Lifting Trolley:

1. Overall Dimensions

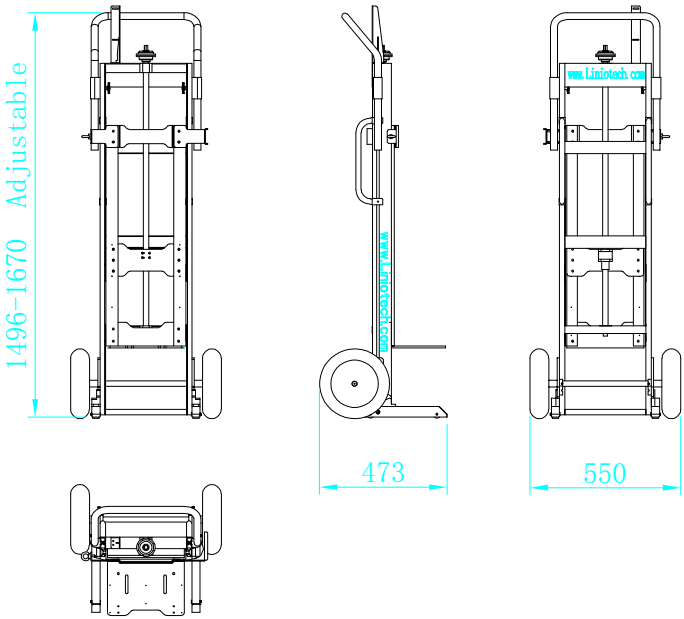

2. Lifting Stroke: 850mm

3. Load Capacity: 250KG

4. Color: Black and Bright Stainless Steel

Description of Packed Items and Placement Positions. Please check the goods against the BOM list.

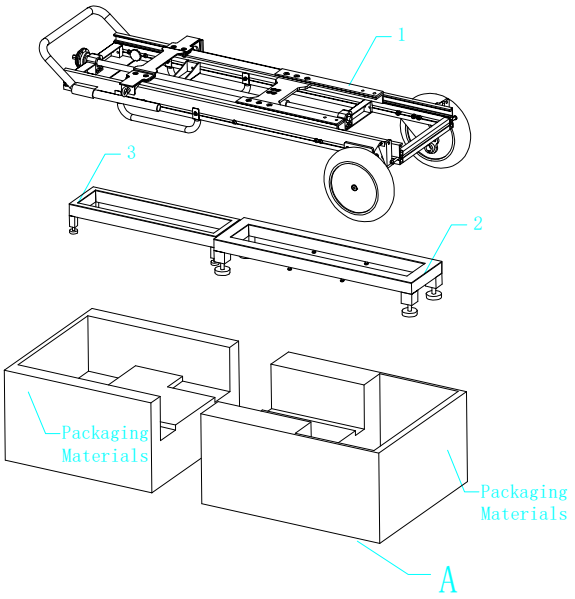

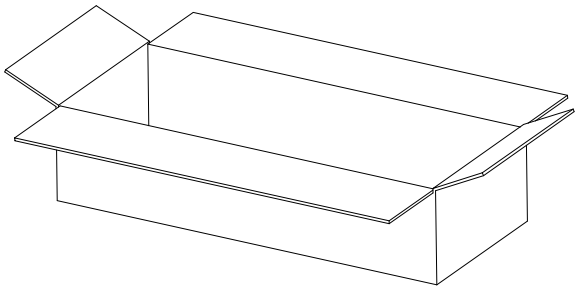

Serial No	Component Name	QTY
1	Main Body	1
2	Carrier bracket A	1
3	Carrier bracket B	1
4	Electric Drill Fixing Bracket	1
5	Foot Support	2

Serial No	Component Name	QTY
6	Strap tensioner	1
7	Pallet	1
8	Fasteners and Operation Manual	1
9	Bracket fixing bolt(Inside tape)	8

DETAIL A:

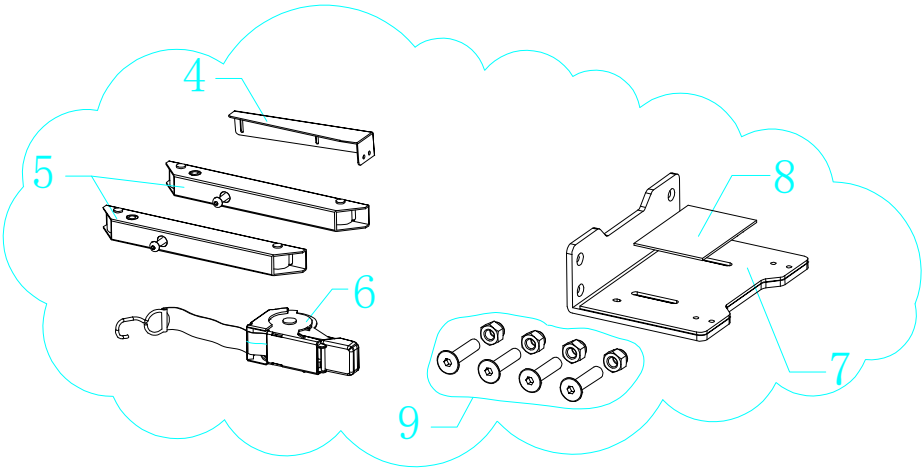

Installation steps description:

一

Loosen the screws on part 1 and 5 using an internal hexagonal wrench;

Align the holes of part 5 with those of part 1, then insert the removed screws and tighten them accordingly.

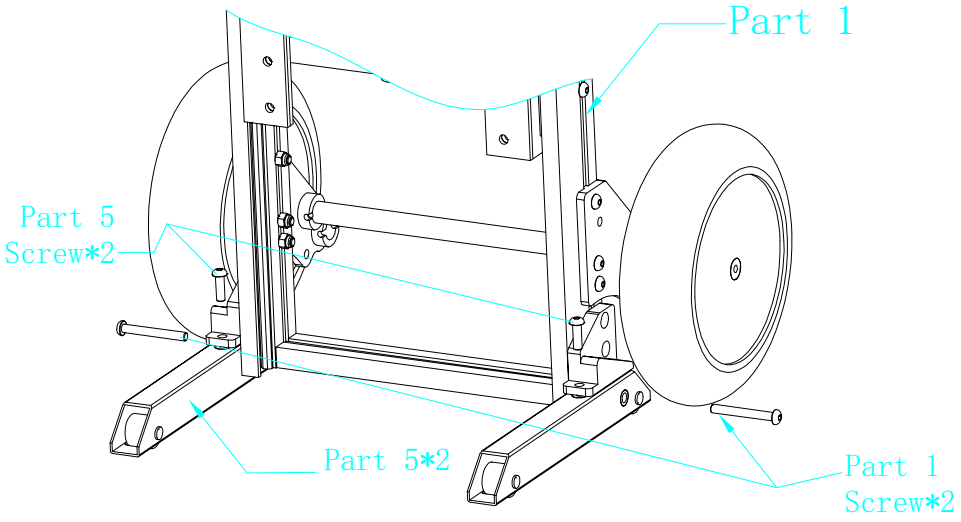

二

Push part 7 upwards from the bottom into the main body 1;
Insert part 9 screw-nut into the corresponding hole and secure it.

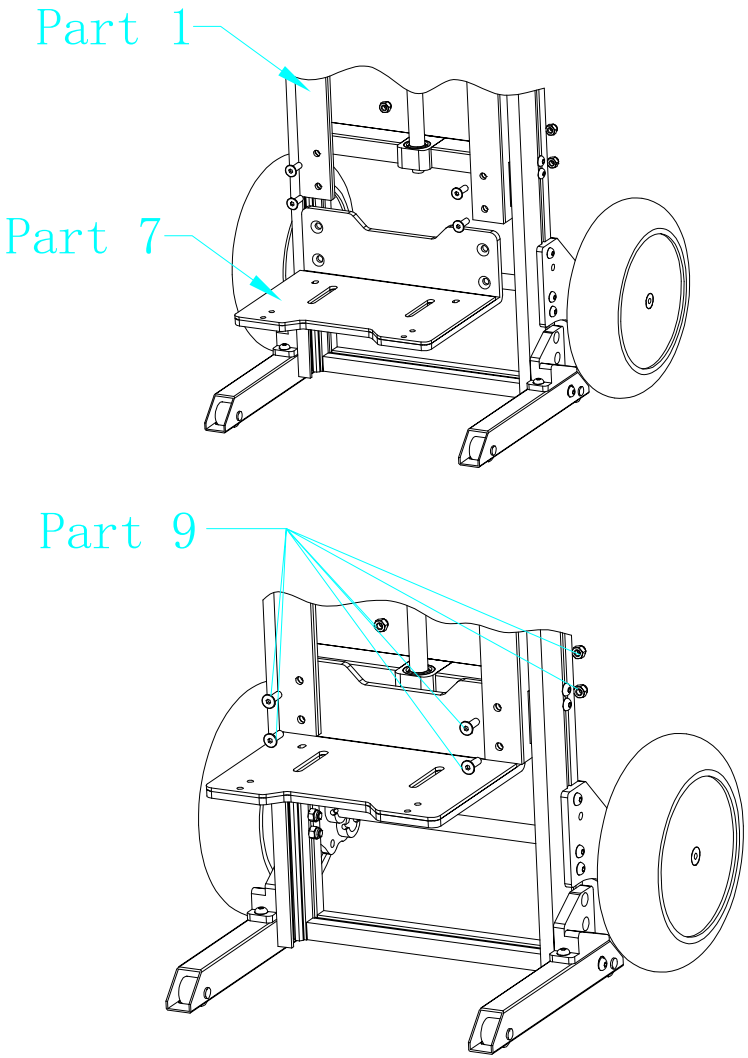

三

Loosen the screw nuts on the main body 1;

Align part 6 with the holes, insert the corresponding screw nuts and lock them in place;

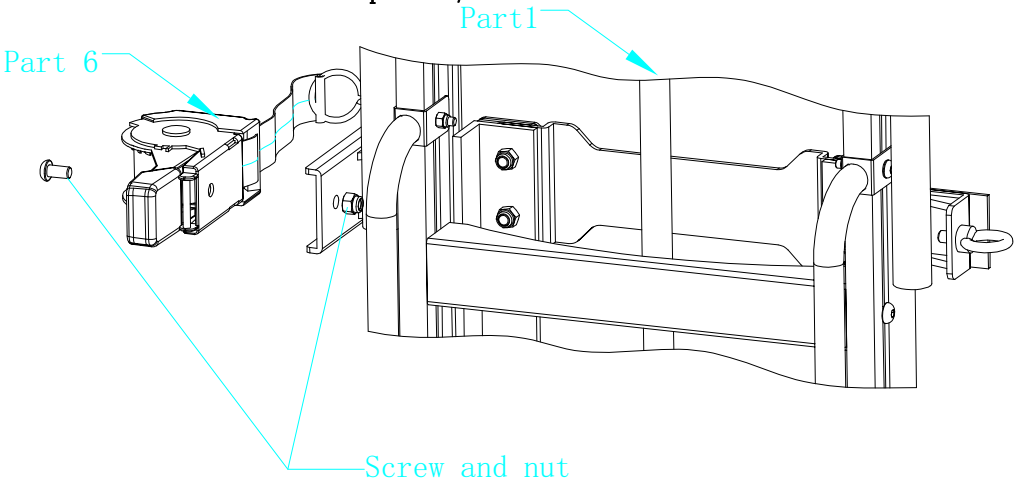

四

Release the Plum Blossom Handle, rotate the handle 180 degrees, and then insert it correspondingly;

Fix part 4 with the corresponding screws

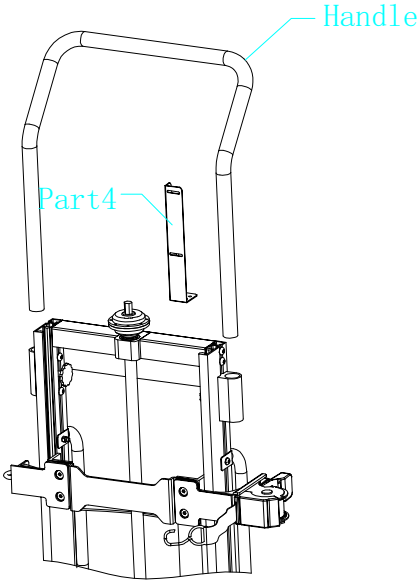

The overall assembly effect is as follows:

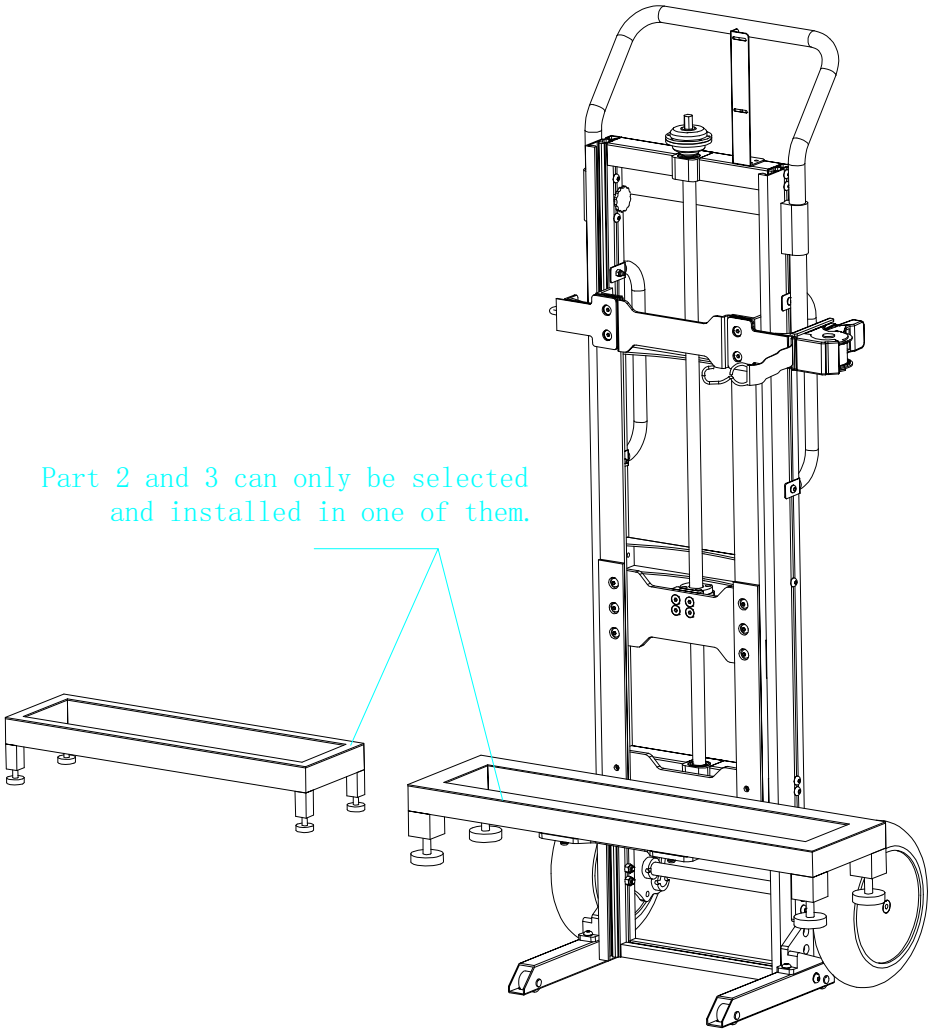

Safety Specifications:

1. Do not exceed a load capacity of 200KG during operation
2. Please inspect carefully before use and ensure all mechanisms are connected and fastened securely before operation.
3. The operator must securely fasten the goods for loading operation with a tensioner. If necessary, use other simp auxiliary equipment according to actual conditions to ensure stability.
4. This equipment is intended for pulling, pushing and lifting operations on clean and flat ground. Do not use it on uneven gravel ground.
5. During operation, do not place hands or feet under the loaded goods to prevent personal safety accidents.
6. The electric drill with transmission, prepared by the operator, must have a torque of 30 N•m or more
7. Please check the air pressure of the tires on both sides at all times and inflate them in a timely manner if necessary.
8. For any matters unable to be confirmed on-site, please contactyour local distributor in a timely manner.